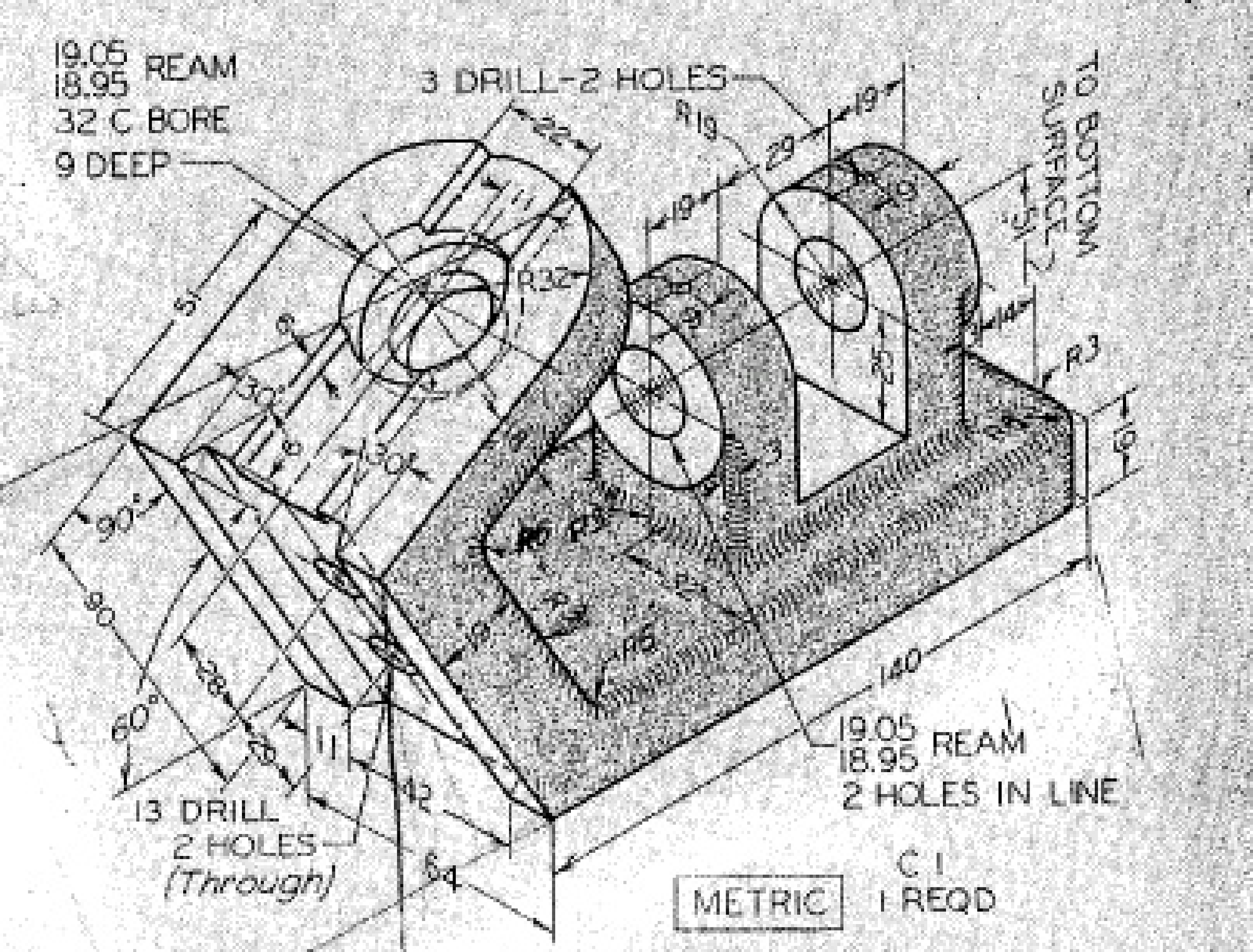

Fig. 8.41 Control Bracket. Draw necessary views, including partial auxiliary views and regular views (Layout C–4 or A2–4).*